0 603 365 139
Stand } ~~04-01~~
Issue } 04-10-06

Fig./Abb. 1

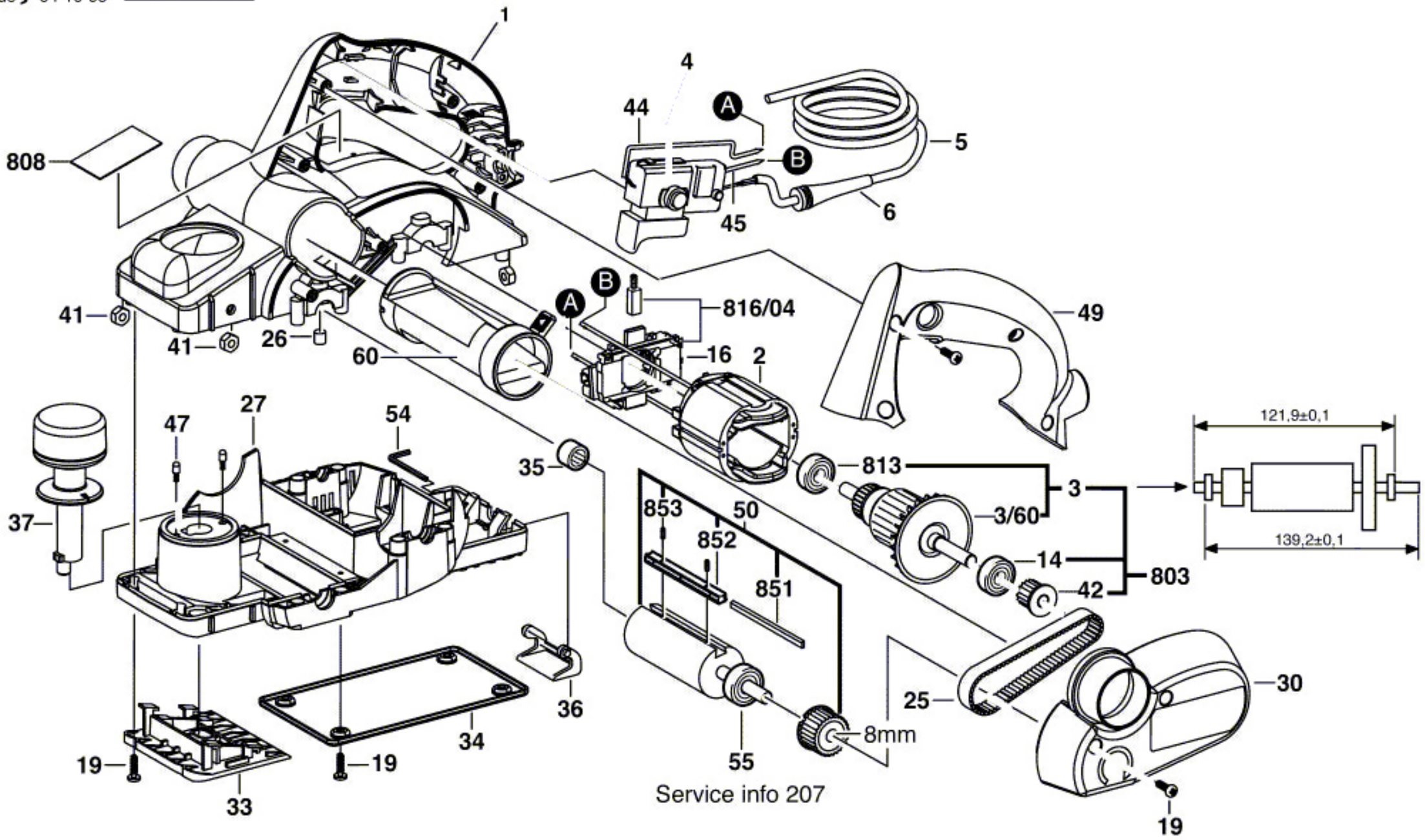

Service info 207

Änderungen vorbehalten
Modifications reserved
Modifications resérvées
Salvo modificaciones