PARTS BREAKDOWN

rev 0_07/26/2010
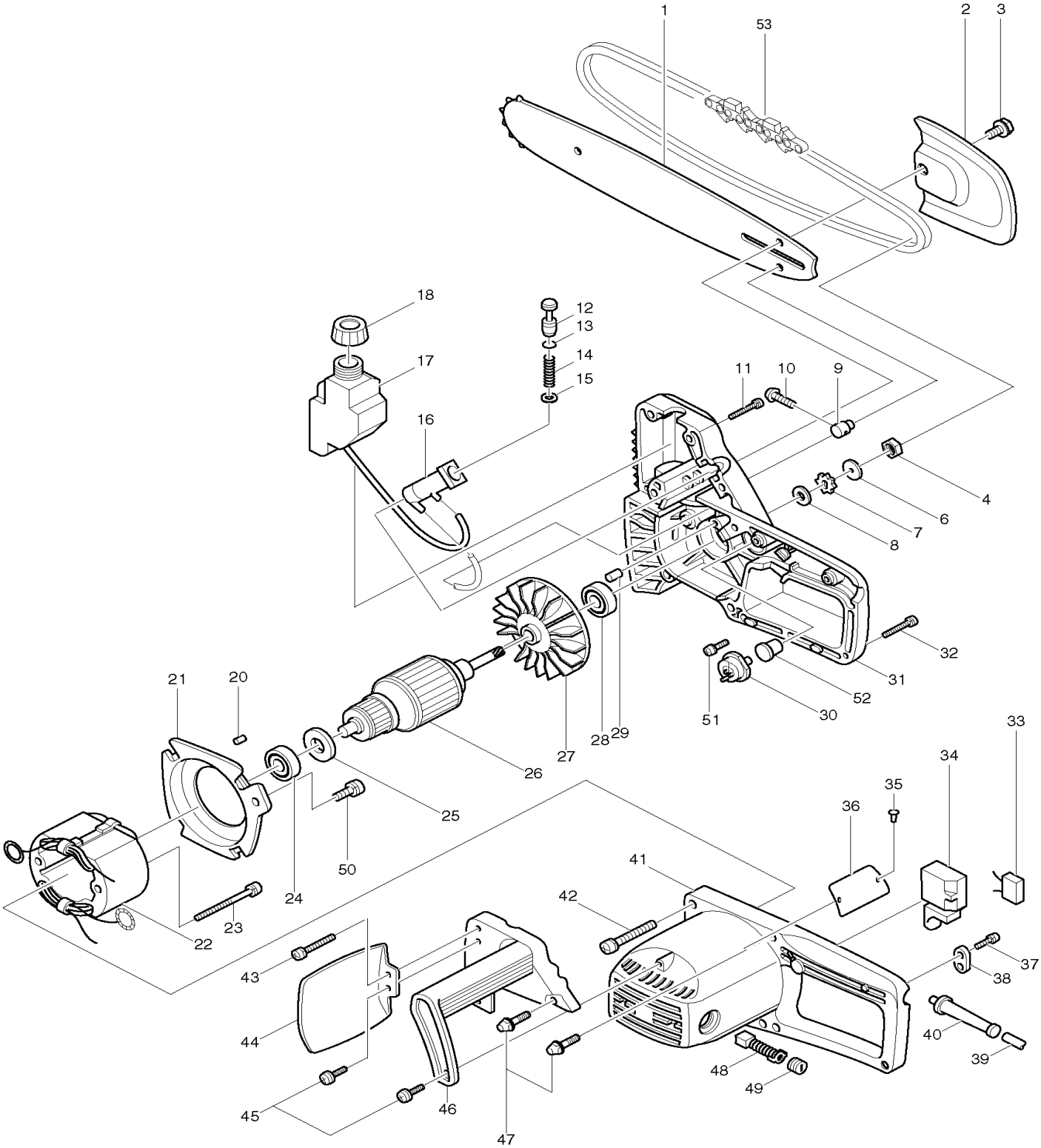
5012B