F012 535 000

Issue Stand 99-12-27
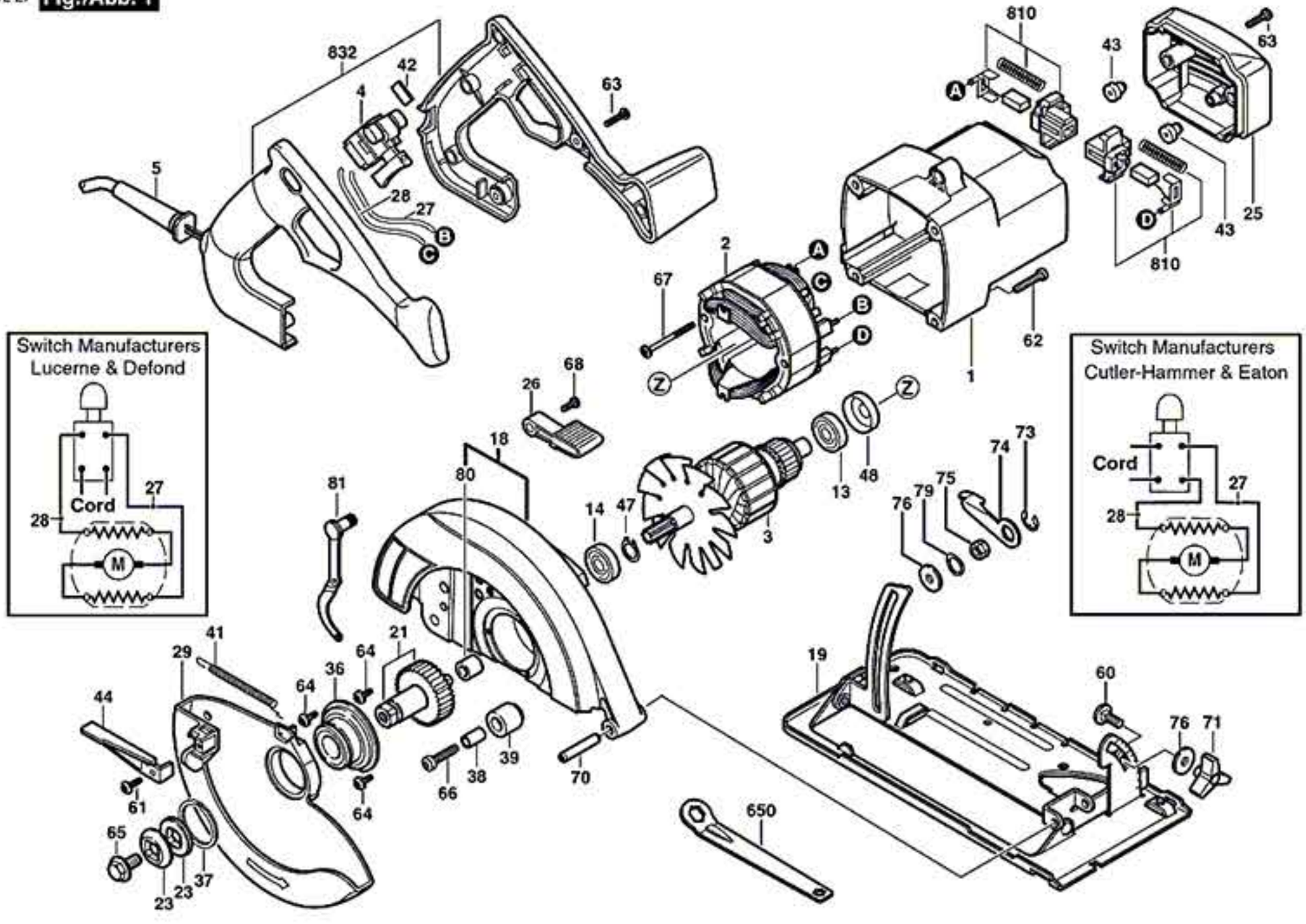
Fig./Abb. 1