F012 536 584

Issue Stand 00-03-02
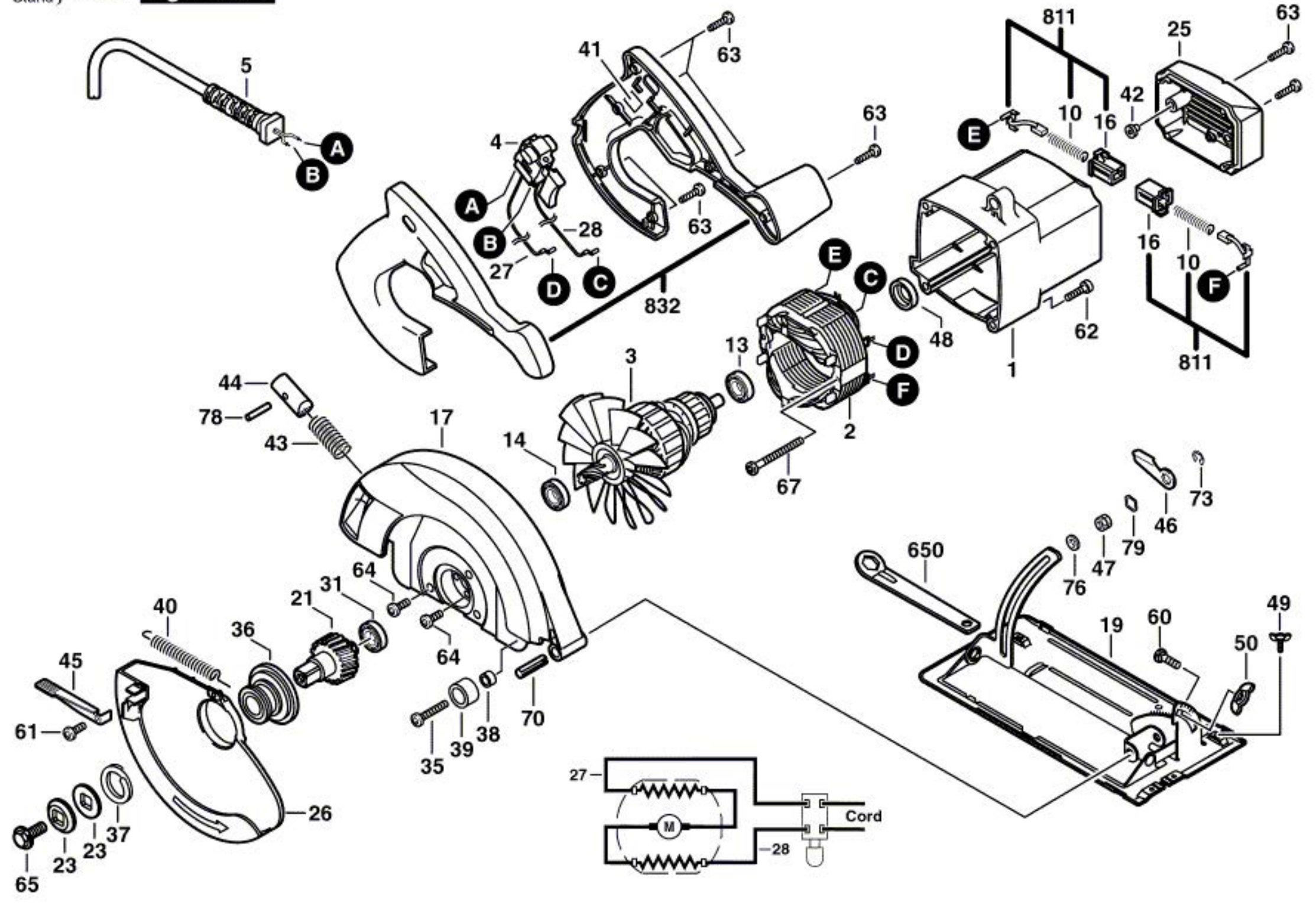
Fig./Abb. 1