HITACHI

LIST NO. E826

ELECTRIC TOOL PARTS LIST

■CORDLESS DRIVER DRILL
Model D 10DG

1993・2・2
(E3)

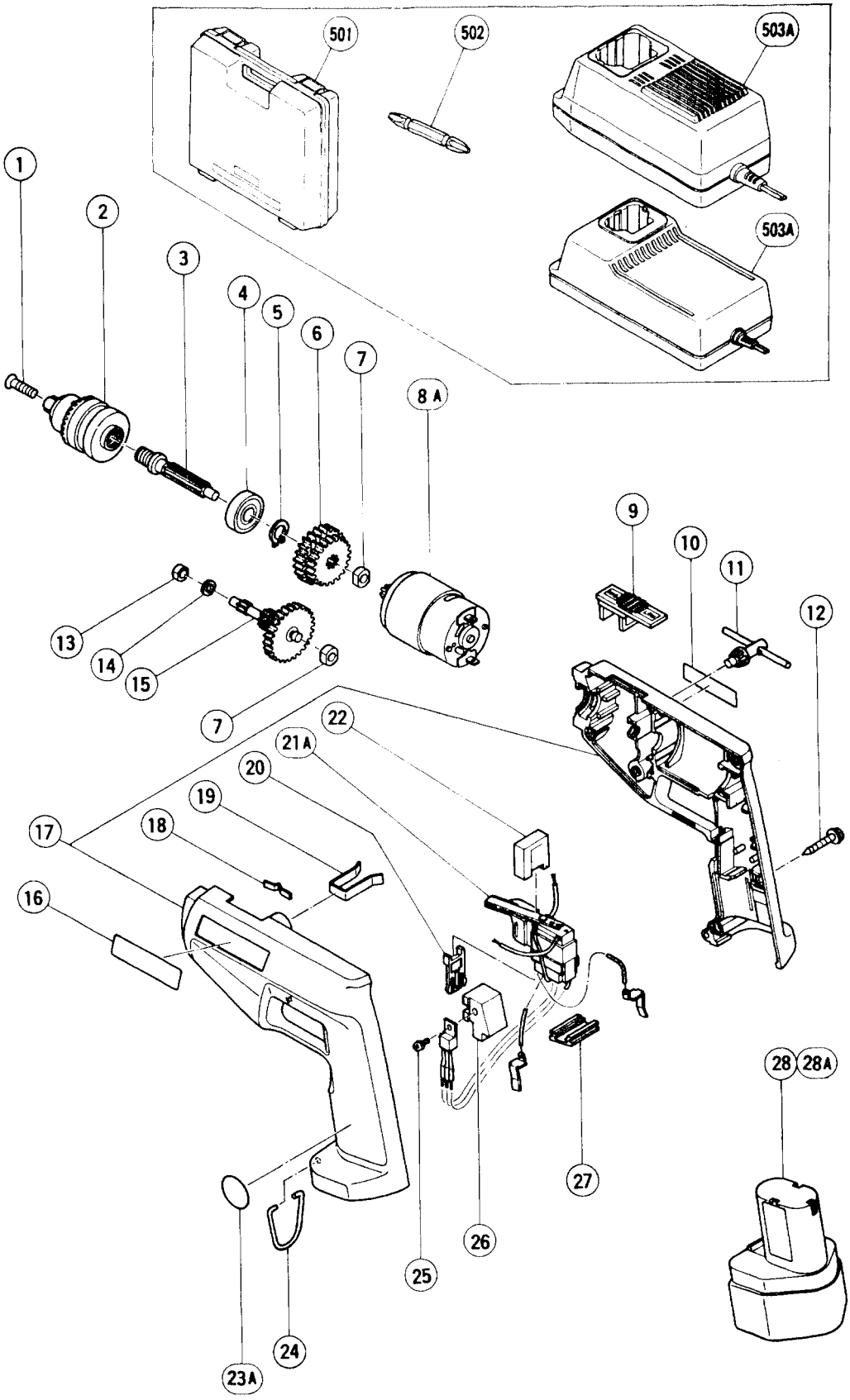

	ITEM NO.	CODE NO.	DESCRIPTION	NO. USED	REMARKS	
	1	992-077	FLAT HD. SCREW (LEFT HAND) M5X17	1		
*	2	950-292	DRILL CHUCK 10TLRA	1	INCLUD.11	
*	2	301-553	DRILL CHUCK 10TLR – N (W/O CHUCK HANDLE)	1	FOR SUI,SWE,FIN,FRA	
	3	980-843	SPINDLE	1		
	4	600-0VV	BALL BEARING 6000VVCMPS2S	1		
	5	939-540	RETAINING RING FOR D10 SHAFT (10 PCS.)	1		
	6	981-348	FINAL GEAR	1		
	7	997-752	METAL	2		
	8A	303-395	MOTOR	1		
	9	991-664	SHIFT KNOB	1		
	10		CAUTION PLATE	1		
	11	980-057	CHUCK WRENCH 10TL2	1		
	12	930-446	TAPPING SCREW (W/WASHER) D4X16	6		
	13	994-677	METAL D4X6	1		
	14	949-423	WASHER M4 (10 PCS.)	1		
	15	980-823	SECOND PINION	1		
	16		NAME PLATE	1		
	17	995-420	HOUSING (A).(B) SET	1		
	18	980-829	SHIFT SPRING	1		
	19	980-837	KEY HOLDER	1		
	20	980-833	SWITCH LOCK	1		
	21A	998-360	SWITCH (2P PLUG IN TYPE) W/O LOCK	1		
	22	980-834	SEAL	1		
	23A	987-135	MARK PLATE	1		
	24	980-838	HOOK	1		
	25	998-362	MACHINE SCREW (W/SP. WASHER) M3.5X8	1		
	26	998-361	FIN	1		
	27	991-666	TERMINAL SUPPORT	1		
*	28	991-642Z	BATTERY EB 9 (W/ENGLISH N.P.)	1		
*	28	991-641Z	BATTERY EB 9 (W/GERMAN N.P.)	1	FOR FRG,AUT	
*	28	991-643Z	BATTERY EB 9 (W/FRENCH N.P.)	1	FOR FRA	
*	28	991-644Z	BATTERY EB 9 (W/ENGLISH N.P.)	1	FOR USA,CAN	
*	28A	991-681	BATTERY EB 9 (W/ENGLISH N.P.)	1	FOR HOL,DEN,SWE,SUI,NOR	
*	28A	991-683	BATTERY EB 9 (W/GERMAN N.P.)	1	FOR BEL	

*: ALTERNATIVE PARTS

STANDARD ACCESSORIES

D 10DG

ITEM NO.	CODE NO.	DESCRIPTION	NO. USED	REMARKS	
501	302-375	CASE	1	FOR 1 HOUR CHARGER (MODEL UC12Y)	
				DEPENDING ON ORDER SPEC.	
501	305-655	CASE	1	FOR 15 MINUTE CHARGER	
				(MODEL UC12YA) DEPENDING ON ORDER	
				SPEC.	
502	955-654	+ DRIVER BIT (A) NO.2 70L	1		
503A		CHARGER (MODEL UC 12Y)	1	DEPENDING ON ORDER SPEC.	
503A		CHARGER (MODEL UC 12YA)	1	DEPENDING ON ORDER SPEC.	
572	303-890	CASE (A)	1		

OPTIONAL ACCESSORIES

ITEM NO.	CODE NO.	DESCRIPTION	NO. USED	REMARKS	
601	955-657	− DRIVER BIT (A) 3MMX70L	1		
602	955-659	− DRIVER BIT (A) 4MMX70L	1		
603	955-674	− DRIVER BIT (A) 6MMX70L	1		
604	955-670	+ DRIVER BIT (A) NO.1 70L	1		
605	955-655	+ DRIVER BIT (A) NO.3 70L	1		

ALTERNATIVE PARTS

ITEM NO.	CODE NO.	DESCRIPTION	NO. USED	REMARKS	