LIST NO. 0124

HITACHI

ELECTRIC TOOL PARTS LIST

■ ELECTRIC DRILL

1981·1·10

Type DUT-10 ▣

DUT-10(A1)

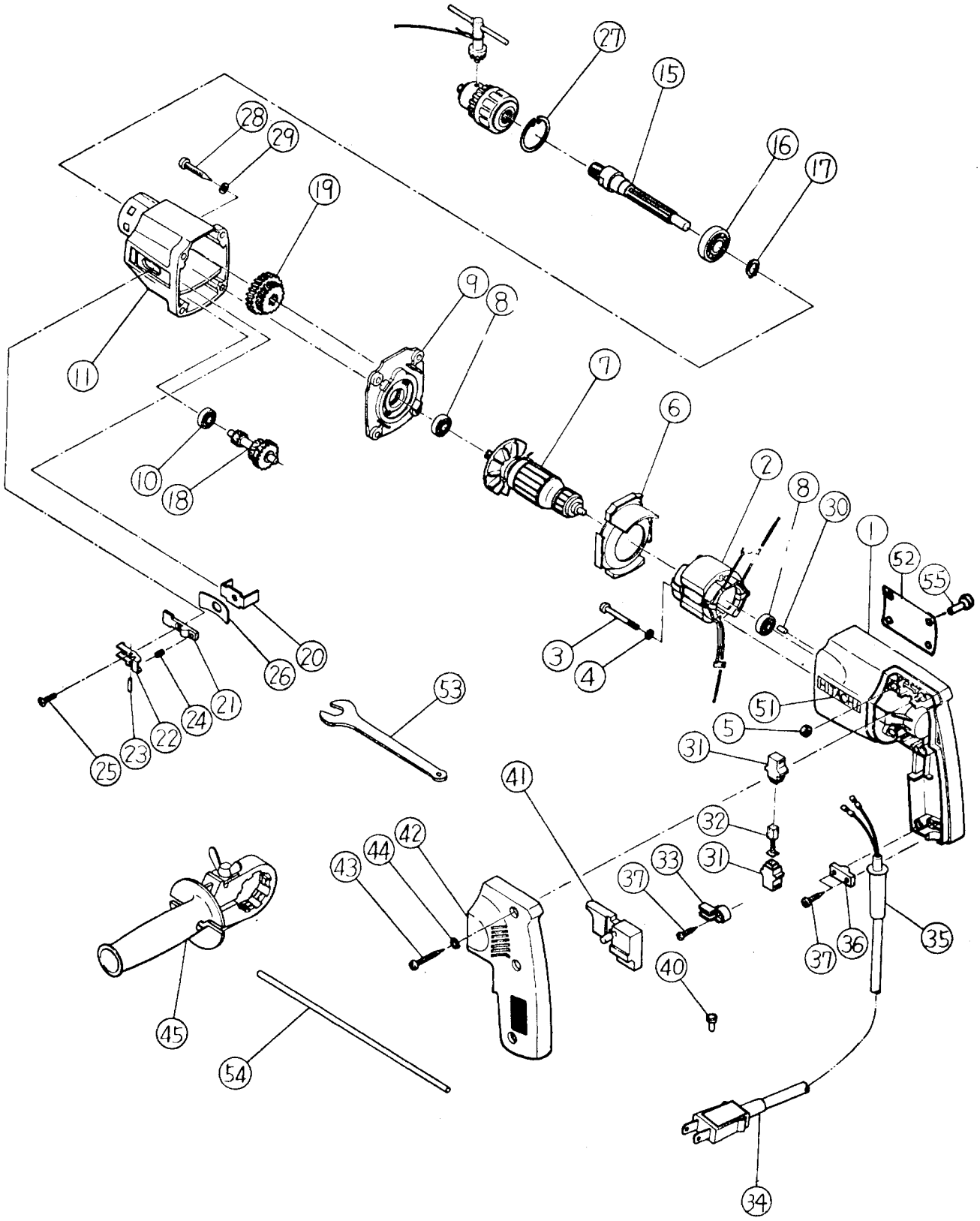

PARTS (Prices are subject to change without notice) DUT-10(A1)

Item No.	Code No.	Parts Name		Q'ty	Remarks			LIST PRICE US$
1	971640	Housing		1				8.00
2	971665C	Stator Ass'y	115V	1				11.00
3	949278Z	⊕Hd. Machine Screw	M4 x 55	2	(10 pcs.)			0.40
4	949453Z	Spring Lock Washer		2	for M4 (10 pcs.)			0.40
5	949554Z	Nut	M4	2	(10 pcs.)			0.40
6	971642	Fan Guide		1				0.40
7	971666C	Armature Ass'y	115V	1				33.30
8	939396	Ball Bearing (608ZZC2)		2				2.10
9	971664	Inner Cover Ass'y		1				7.40
10	939396	Ball Bearing (608ZZC2)		1				2.10
11	980972	Gear Cover		1				8.90
15	980973	Spindle		1				7.20
16	956397	Ball Bearing (6202DDCM)		1				2.60
17	947214	C-Type Retaining Ring		1	for D15 shaft			0.20
18	971700	Second Pinion Ass'y		1				12.70
19	980192	Gear Ass'y		1				5.90
20	971651	Shift Arm		1				0.40
21	971652	Shift Plate		1				0.70
22	971653	Shift Lock		1				0.50
23	949535Z	Roll Pin	D3 x 12	1	(10 pcs.)			0.40
24	943053	Spring (B)		1				0.40
25	949323Z	⊕Flat Hd. Screw	M4 x 12	1	(10 pcs.)			0.40
26	971672	Seal Plate		1				0.70
27	948409	C-Type Retaining Ring		1	for D35 hole			0.50
28	931875	⊕Tapping Screw	M5 x 35	4				0.20
29	949454Z	Spring Lock Washer		4	for M5 (10 pcs.)			0.40
30	946362	Bearing Lock		1				0.20
31	955203	Carbon Brush Holder		2				1.00
32	999041	Carbon Brush		2				1.30
33	971655	Holder Piece		2				0.40
34	500240Z	Cord Ass'y		1	w/o terminal			6.10
35	930354	Cord Armor	D10.2	1				0.50
36	937631	Cord Clip		1				0.20
37	954004	⊕Tapping Screw	M4 x 16	4				0.20
40	939310Z	Connector		1	(10 pcs.)			0.70
41	957747	Single Pole Switch (Screw Type)		1	w/lock			4.90
42	971660	Handle Cover		1				3.60
43	956384	⊕Tapping Screw	M4 x 20	3				0.20
44	949423Z	Washer		3	for M4 (10 pcs.)			0.40
45	971662	Side Handle Ass'y		1				3.80
51	957561	HITACHI Label		1				0.20
47	–	Name Plate		1				0.50
53	937914	Wrench		1				1.10
54	971677	Depth Stopper		1				2.30
55	932642	Rivet	D2.5 x 2.8	4				0.20