CORDLESS RECIPRO SAW MODEL BJR240SH

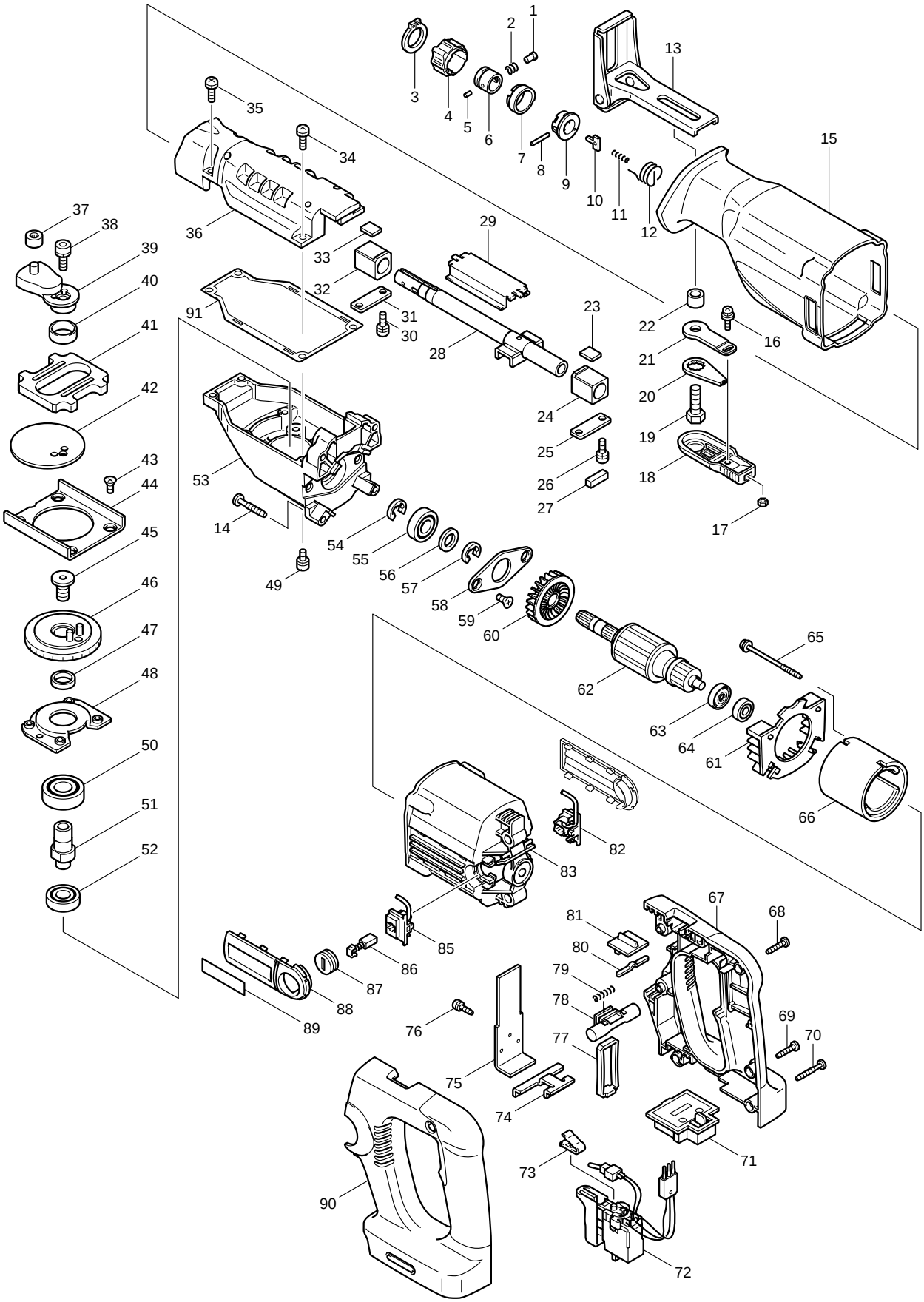

Item No.	Part No.	Qty. Used	Description
1	256471-1	1	SHOULDER PIN 5
2	233345-3	1	COMPRESSION SPRING 6
3	961078-7	1	RETAINING RING S-18
4	162228-9	1	DRIVING SLEEVE
5	268094-3	1	PIN 3
6	331639-1	1	GUIDE SLEEVE
7	417791-0	1	DRIVING SLEEVE GUIDE
8	256158-5	1	PIN 3
9	310129-7	1	SLEEVE
10	345214-7	1	PUSH PLATE
11	233025-1	1	COMPRESSION SPRING 2
12	231662-5	1	TORSION SPRING 17
13	163433-1	1	SHOE
14	266173-1	4	TAPPING SCREW 5X30
15	421809-1	1	INSULATION COVER
16	911114-9	1	PAN HEAD SCREW M4X10
17	931102-0	1	HEX. NUT M4
18	272240-2	1	LEVER 60
19	921442-4	1	HEX. BOLT M8X25
20	344733-0	1	LOCK PLATE
21	344732-2	1	INNER PLATE
22	257558-2	1	SLEEVE 9
23	443070-0	1	PLATE 12X16
24	214169-6	1	PLANE BEARING 14
25	341462-6	1	PLATE
26	911225-0	2	P. H. SCREW M5X16
27	443117-0	1	FELT 6X20
28	168361-5	1	SLIDER
29	345213-9	1	SLIDE PLATE
30	911225-0	2	P. H. SCREW M5X16
31	341462-6	1	PLATE
32	214169-6	1	PLANE BEARING 14
33	443070-0	1	PLATE 12X16
34	911228-4	2	P. H. SCREW M5X18
35	911228-4	2	P. H. SCREW M5X18
36	153371-5	1	GEAR HOUSING COVER Cpl.
37	212001-8	1	NEEDLE BEARING 708
38	265906-1	1	H. S. H. BOLT M6X18
39	153373-1	1	CRANK SHAFT Cpl.
40	257251-8	1	RING 21
41	313109-2	1	COUNTER WEIGHT
42	345215-5	1	PLATE
43	251372-8	4	+ C.S.H. SCREW M5X12
44	345216-3	1	GUIDE PLATE
45	266210-1	1	H. S. H. BOLT M10X18
46	153372-3	1	GEAR COMPLETE
47	257053-2	1	RING 15
48	285705-5	1	BEARING RETAINER 58
49	265976-0	4	H.S.H. BOLT M5X10
50	211206-7	1	BALL BEARING 6202LLB
51	324251-4	1	GEAR SHAFT
52	211101-1	1	BALL BEARING 6001LLB
53	317539-9	1	GEAR HOUSING
54	961016-9	1	STOP RING E-10
55	211131-2	1	BALL BEARING 6001DDW
56	253744-3	1	FLAT WASHER 12
57	961016-9	1	STOP RING E-10
58	285706-3	1	BEARING RETAINER 58
59	251372-8	2	+ C.S.H. SCREW M5X12
60	240052-1	1	FAN 46
61	417792-8	1	BAFFLE PLATE
62	519074-5	1	ARMATURE ASS'Y 24V (INCL. FIG. 60, 61, 63, & 64)
63	681652-2	1	INSULATION WASHER
64	210017-7	1	BALL BEARING 607DDW
65	266060-4	2	TAPPING SCREW 4X65
66	638107-8	1	YOKE UNIT
67	183421-2	1	HANDLE SET (INCL. FIG. 90)
68	266045-0	1	TAPPING SCREW 4X20
69	266045-0	1	TAPPING SCREW 4X20
70	266050-7	4	TAPPING SCREW 4X30
71	643983-7	1	TERMINAL
72	650519-5	1	SWITCH C3LA-2A-L2SM
73	232205-6	1	LEAF SPRING
74	344898-8	1	SUPPORT PLATE
75	689116-0	1	HEAT SINK
76	911006-2	1	P. H. SCREW M3X8
77	417790-2	1	STOPPER
78	417789-7	1	LOCK OFF BUTTON
79	231469-9	1	COMPRESSION SPRING 4
80	232198-7	1	LEAF SPRING
81	417788-9	1	SPEED CHANGE LEVER
82	643990-0	1	BRUSH HOLDER
83	417783-9	1	MOTOR HOUSING
85	643949-7	1	BRUSH HOLDER R
86	191976-3	1	CARBON BRUSH CB-432 SET
87	643941-3	2	BRUSH HOLDER CAP
88	417787-1	2	BUMPER
89	819063-3	2	MAKITA LABEL
90	183421-2	1	HANDLE SET (INCL. FIG. 67)
91	417921-3	1	GASKET
D01	654037-5	2	INSULATED TERMINAL RBV1.25-3.5
D02	654208-4	2	RECEPTACLE
D03	652038-7	2	P. H. SCREW M3X8

ACCESSORIES

A02	193128-2	1	BATTERY B2417 (1.7AH)
A03	824659-7	1	PLASTIC CARRYING CASE (INCL. 2 EA. 417075-6 LATCH)
A04	DC24SA	1	CHARGER