FINISHING SANDER MODEL BO4551

IMPORTANT — To assure product SAFETY and RELIABILITY, repairs, maintenance or adjustments should be performed by MAKITA Service Centers or other qualified service organizations. Always use MAKITA replacement parts.

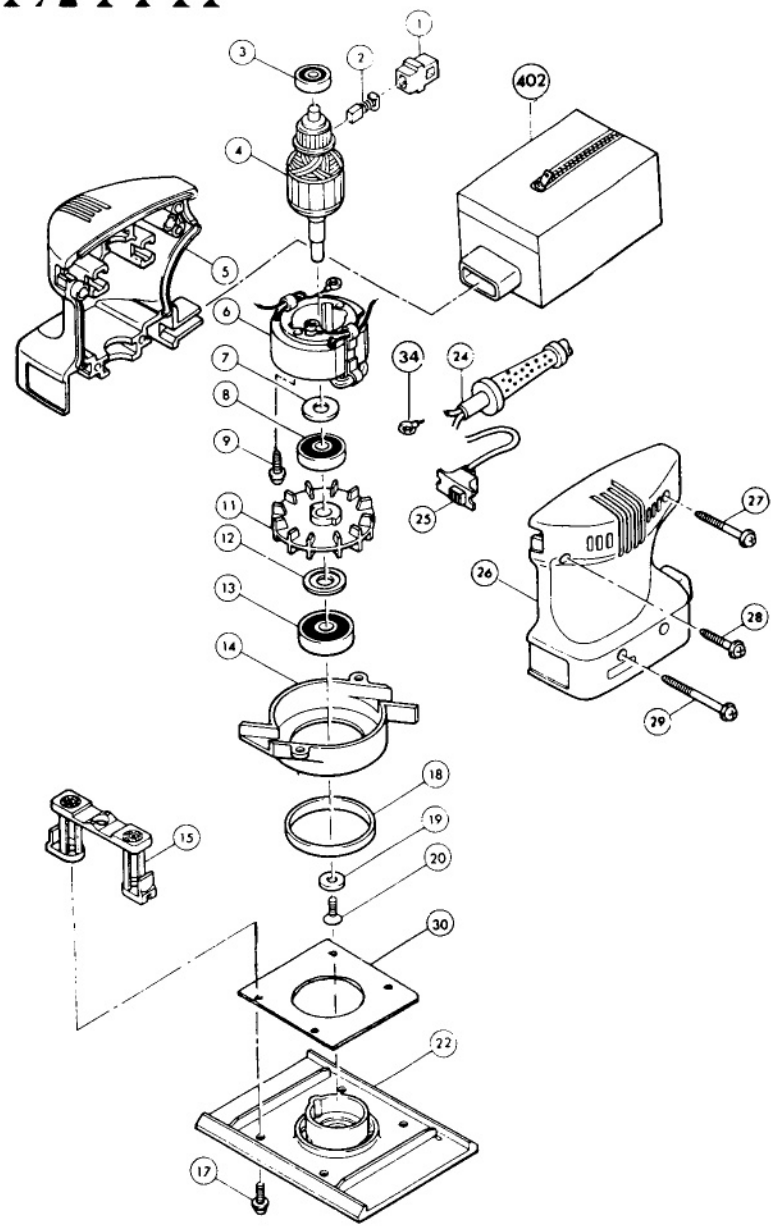

WIRING DIAGRAM

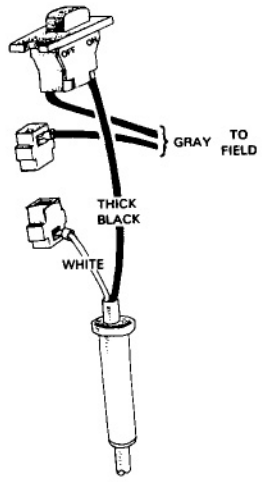

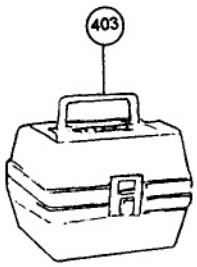

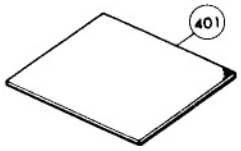

Fig.	Part No.	Qty. Used	Description
1	643552-4	2	BRUSH HOLDER
2	191956-9	2	CARBON BRUSH (CB-75)
3	211016-2	1	BALL BEARING 626LLB
4	611566-1	1	ARMATURE (Incl. Fig 3,7 & 8)
5	181952-5	1	HOUSING SET (Incl. Fig. 30)
6	639302-3	1	FIELD
7	253214-2	1	FLAT WASHER 9
8	211092-6	1	BALL BEARING 629DDW
9	265871-4	2	TAPPING SCREW M4X16
11	241658-8	1	FAN
12	213051-6	1	DUST SEAL 10
13	211066-7	1	BALL BEARING 6200LLB
14	410752-9	1	BAFFLE PLATE
15	411343-9	2	FOOT
17	251364-7	4	P.H. SCREW M4X14
18	262512-3	1	RUBBER SLEEVE 48
19	253825-3	1	FLAT WASHER 6
20	912117-6	1	SCREW M4X12
22	151404-0	1	BASE (w/Rubber Pin 263002-9)
24	664425-8	1	POWER SUPPLY CORD
25	651513-0	1	SWITCH
26	181952-5	1	HOUSING SET (Incl. Fig. 5)
27	265876-4	1	TAPPING SCREW 4X40
28	265875-6	1	TAPPING SCREW 4X25
29	265872-2	2	TAPPING SCREW 4X50
30	344100-9	1	PLATE 85
34	654078-1	1	TERMINAL RING

ACCESSORIES

401	742529-7	1	ABRASIVE PAPER #60
	742530-2	1	ABRASIVE PAPER #100
	742531-0	1	ABRASIVE PAPER #150
402	166027-1	1	DUST BAG
403	824427-8	1	PLASTIC TOOL CASE