9/16" (15mm) HAMMER DRILL

Model HP1500
Model HP1501
Model HP1501K

IMPORTANT! – To assure product SAFETY and RELIABILITY, repairs should be performed by MAKITA Service Centers or other qualified service organizations. Always use MAKITA replacement parts.

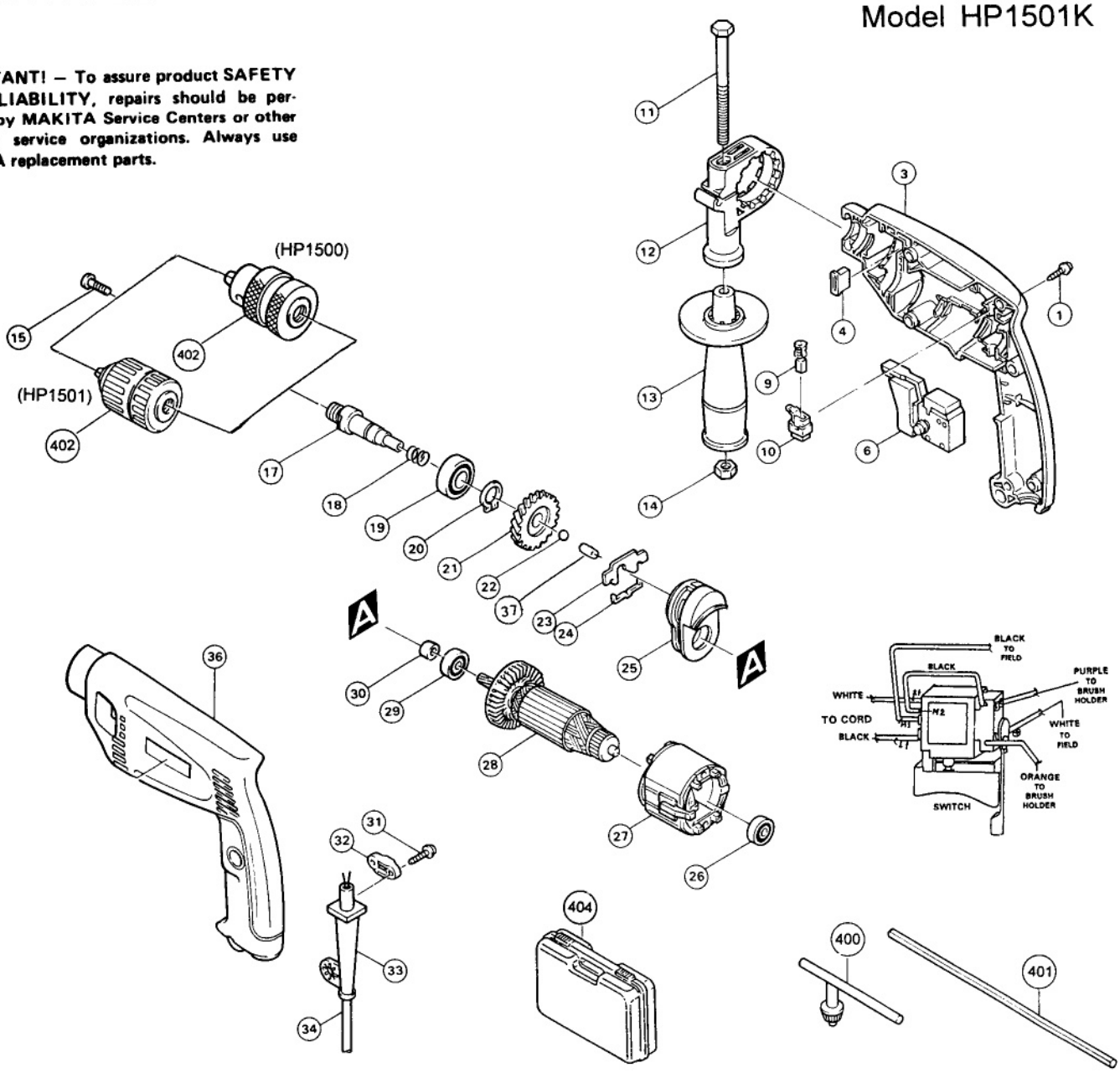

Fig.	Part No.	Qty. Used	Description
1	265995-6	8	T. SCREW PT 4x18
3	182841-7	1	HOUSING Set (Incl. Fig. 36)
4	415453-4	2	CHANGE BUTTON
6	651935-4	1	SWITCH
9	191927-6	1	CARBON BRUSH Set
10	643923-5	2	BRUSH HOLDER
11	921919-9	1	BOLT M8x110
12	415485-1	1	GRIP BASE
13	152489-9	1	GRIP 36 (Incl. H. Nut M8, 931402-8)
15	251425-3	1	F.H. SCREW M6x22
17	322900-7	1	SPINDLE
18	233091-8	1	COMPRESSION SPRING 16
19	211201-7	1	BALL BEARING 6002LLB
20	961055-9	1	RETAINING RING S-15
21	226423-6	1	HELICAL GEAR 41
22	216001-0	1	STEEL BALL 3.5
23	344419-6	1	CHANGE PLATE
24	232134-3	1	LEAF SPRING
25	152529-3	1	CAM HOLDER Cpl.
26	211028-5	1	BALL BEARING 627LB
27	633301-7	1	FIELD 115V
28	517106-2	1	ARMATURE Ass'y (Incl. Fig. 26 & 29)
29	211033-2	1	BALL BEARING 608LB
30	262528-8	1	SLEEVE 7
31	265995-6	2	T. SCREW 4x18
32	687063-9	1	STRAIN RELIEF
33	682502-4	1	CORD GUARD (HP1501)
	682549-8	1	CORD GUARD (HP1500)
34	664064-4	1	CORD (2x18x8;SJ)
36	182841-7	1	HOUSING Set (Incl. Fig. 3)
37	256251-5	1	PIN 4
ACCESSORIES			
400	763430-3	1	CHUCK KEY S13 (HP1500)
401	415486-9	1	DEPTH ROD
402	763114-3	1	DRILL CHUCK (HP1500)
	763116-9	1	KEYLESS DRILL CHUCK S13 (HP1501)
404	182766-5	1	PLASTIC TOOL CASE