3 611 C32 111
Issue Stand 13-10-11

Fig./Abb. 1

● = Pos. 899 1 617 000 897
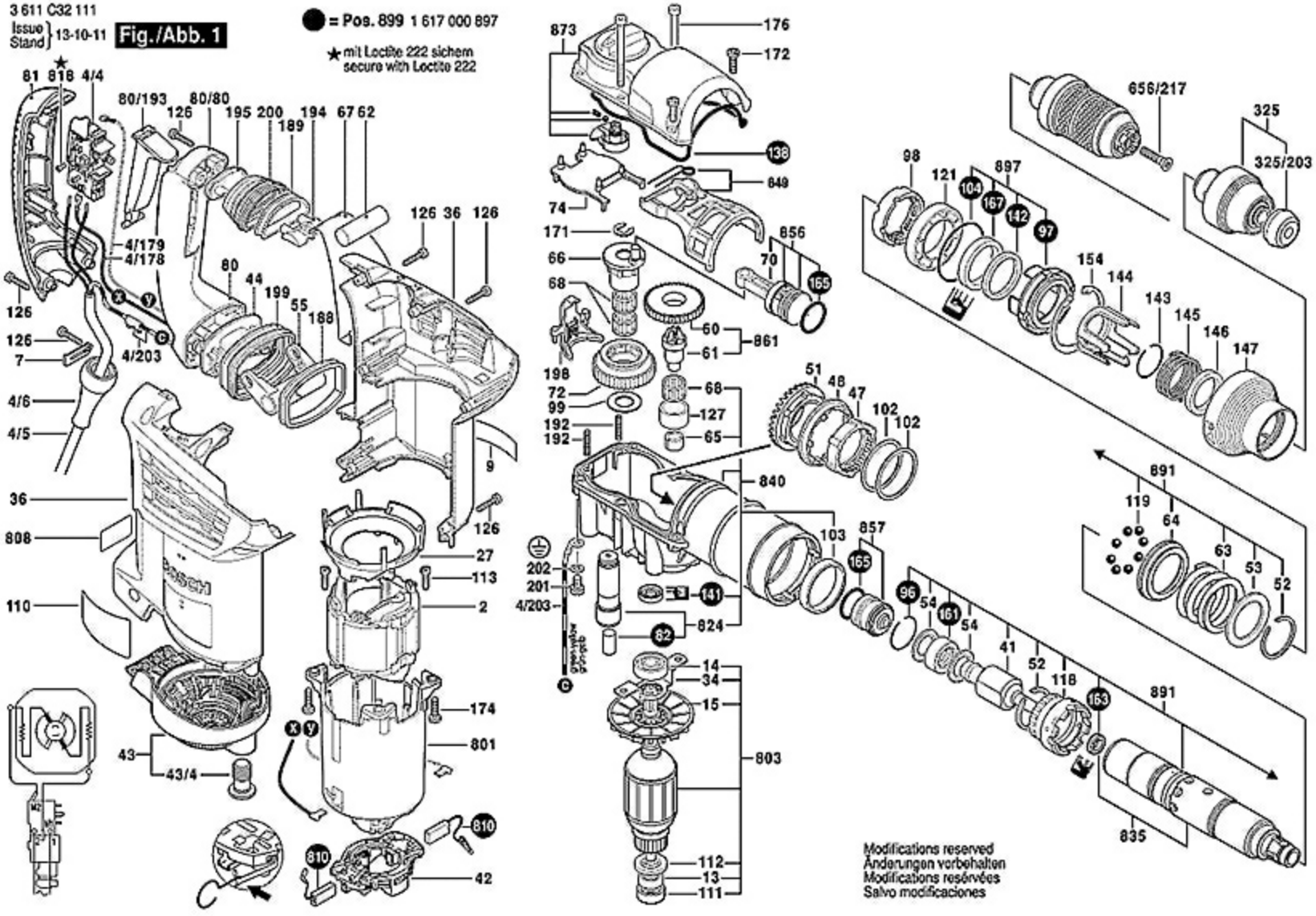
★ mit Loctite 222 sichern
secure with Loctite 222